Solving Polynomial Equations Algebraically

Learn Solving Polynomial Equations by Factoring

Like quadratics, some polynomials of higher degrees can be factored. A polynomial that cannot be written as a product of two polynomials with integral coefficients is called a **prime polynomial**. Like a prime real number, the only factors of a prime polynomial are 1 and itself.

Similar to quadratics, some cubic polynomials can be factored by using polynomial identities.

Key Concept • Sum and Difference of Cubes

Factoring Technique	General Case
Sum of Two Cubes	$a^3 + b^3 = (a + b)(a^2 - ab + b^2)$
Difference of Two Cubes	$a^3 - b^3 = (a - b)(a^2 + ab + b^2)$

Polynomials can be factored by using a variety of methods, the most common of which are summarized in the table below. When factoring a polynomial, always look for a common factor first to simplify the expression. Then, determine whether the resulting polynomial factors can be factored using one or more methods.

Key Concept • Factoring Techniques

Number of Terms	Factoring Technique	General Case
any number	Greatest Common Factor (GCF)	$2a^4b^3 + 6ab = 2ab(a^3b^2 + 6)$
two	Difference of Two Squares	$a^2 - b^2 = (a + b)(a - b)$
	Sum of Two Cubes	$a^3 + b^3 = (a + b)(a^2 - ab + b^2)$
	Difference of Two Cubes	$a^3 - b^3 = (a - b)(a^2 + ab + b^2)$
three	Perfect Square Trinomials	$a^2 + 2ab + b^2 = (a + b)^2$ $a^2 - 2ab + b^2 = (a - b)^2$
	General Trinomials	$acx^2 + (ad + bc)x + bd$ $= (ax + b)(cx + d)$
four or more	Grouping	$ax + bx + ay + by$ $= x(a + b) + y(a + b)$ $= (a + b)(x + y)$

Today's Goals

- Solve polynomial equations by factoring.
- Solve polynomial equations by writing them in quadratic form and factoring.

Today's Vocabulary

prime polynomial

quadratic form

Think About It!

Mateo says that you could use the sum of two cubes to factor $x^{15} + y^{15}$? Is he correct? Why or why not?

Yes; Sample answer: Because $(x^5)^3 = x^{15}$ and because $(y^5)^3 = y^{15}$, you can rewrite the expression as $a^3 + b^3$ where $a = x^5$ and $b = y^5$.

Think About It!

How can you check that an expression has been factored correctly?

Sample answer: Multiply the factors to check that the product is the same as the original expression.

Your Notes

Example 1 Factor Sums and Differences of Cubes

Factor each polynomial. If the polynomial cannot be factored, write *prime*.

a. $8x^3 + 125y^{12}$

The GCF of the terms is 1, but $8x^3$ and $125y^{12}$ are both perfect cubes. Factor the sum of two cubes.

$8x^3 + 125y^{12}$	Original expression
$= (2x)^3 + (\underline{5y^4})^3$	$(2x)^3 = 8x^3$; $(5y^4)^3 = 125y^{12}$
$= (2x + 5y^4)[(2x)^2 - (2x)(5y^4) + (5y^4)^2]$	Sum of two cubes
$= (2x + 5y^4)(\underline{4x^2} - 10xy^4 + \underline{25y^8})$	Simplify.

b. $54x^5 - 128x^2y^3$

$54x^5 - 128x^2y^3$	Original expression
$= 2x^2(27x^3 - 64y^3)$	Factor out the GCF.
$= 2x^2[(\underline{3x})^3 - (\underline{4y})^3]$	$(3x)^3 = 27x^3$; $(4y)^3 = 64y^3$
$= 2x^2(3x - 4y)[(3x)^2 + 3x(4y) + (4y)^2]$	Difference of two cubes
$= 2x^2(3x - 4y)(9x^2 + \underline{12xy} + \underline{16y^2})$	Simplify.

Study Tip

Grouping When grouping 6 or more terms, group the terms that have the *most* common values.

Example 2 Factor by Grouping

Factor $14ax^2 - 16by + 20cy + 28bx^2 - 35cx^2 - 8ay$. If the polynomial cannot be factored, write *prime*.

$14ax^2 - 16by + 20cy + 28bx^2 - 35cx^2 - 8ay$	Original expression
$= (14ax^2 + 28bx^2 - 35cx^2) + (-8ay - 16by + 20cy)$	Group to find a GCF.
$= \underline{7x^2}(2a + 4b - 5c) - \underline{4y}(2a + 4b - 5c)$	Factor out the GCF.
$= (7x^2 - 4y)(\underline{2a} + \underline{4b} - \underline{5c})$	Distributive Property

Think About It!

When factoring by grouping, what must be true about the expressions inside parentheses after factoring out a GCF from each group?

Sample answer: They must be the same.

Example 3 Combine Cubes and Squares

Factor $64x^6 - y^6$. If the polynomial cannot be factored, write *prime*.

This polynomial could be considered the difference of two squares or the difference of two cubes. The difference of two squares should always be done before the difference of two cubes for easy factoring.

$64x^6 - y^6$	Original expression
$= (\underline{8x^3})^2 - (\underline{y^3})^2$	$(8x^3)^2 = 64x^6$; $(y^3)^2 = y^6$
$= (8x^3 + y^3)(8x^3 - y^3)$	Difference of squares
$= [(\underline{2x})^3 + y^3)][(\underline{2x})^3 - y^3)]$	$(2x)^3 = 8x^3$
$= (2x + \underline{y})(4x^2 - \underline{2xy} + y^2)(2x - \underline{y})$ $(4x^2 + \underline{2xy} + y^2)$	Sum and difference of cubes

Go Online You can complete an Extra Example online.

Example 4 Solve a Polynomial Equation by Factoring

Solve $4x^3 + 12x^2 - 9x - 27 = 0$.

$4x^3 + 12x^2 - 9x - 27 = 0$	Original equation
$(4x^3 + 12x^2) + (-9x - 27) = 0$	Group to find a GCF.
$\underline{4x^2}(x + 3) - \underline{9}(x + 3) = 0$	Factor out the GCFs.
$(4x^2 - 9)(x + 3) = 0$	Distributive Property
$(\underline{2x} + \underline{3})(2x - 3)(x + 3) = 0$	Difference of squares
$2x + 3 = 0$ or $2x - 3 = 0$ or $x + 3 = 0$	Zero Product Property
$x = \underline{-\frac{3}{2}}$, $x = \underline{\frac{3}{2}}$, $x = \underline{-3}$	

The solutions of the equation are $\underline{-3}$, $\underline{-\frac{3}{2}}$, and $\underline{\frac{3}{2}}$.

Check

Solve $x^3 + 4x^2 - 25x - 100 = 0$.

$x = \underline{-5}$, $\underline{-4}$, and $\underline{5}$

Example 5 Write and Solve a Polynomial Equation by Factoring

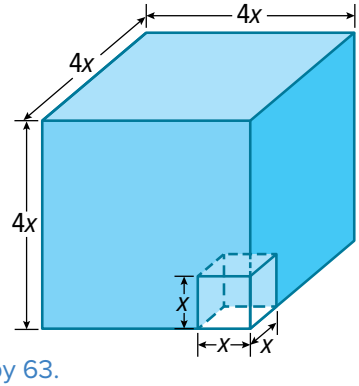

GEOMETRY **In the figure, the small cube is one fourth the length of the larger cube. If the volume of the figure is 1701 cubic centimeters, what are the dimensions of the cubes?**

$(4x)^3 - x^3 = 1701$	Volume of figure
$\underline{64}x^3 - x^3 = 1701$	$(4x)^3 = 64x^3$
$\underline{63}x^3 = 1701$	Subtract.
$x^3 = \underline{27}$	Divide each side by 63.
$x^3 - 27 = 0$	Subtract 27 from each side.
$(x - 3)(\underline{x^2 + 3x + 9}) = 0$	Difference of cubes
$x = \underline{3}$ or $x = \frac{-3 \pm 3i\sqrt{3}}{2}$	Solve.

Since $\underline{3}$ is the only real solution, the lengths of the cubes are $\underline{3}$ cm and $\underline{12}$ cm.

Sample answer: The exponent of one of the variable terms is twice the exponent of the other variable term.

Learn Solving Polynomial Equations in Quadratic Form

Some polynomials in x can be rewritten in **quadratic form**.

Key Concept • Quadratic Form

An expression in quadratic form can be written as $au^2 + bu + c$ for any numbers a, b, and c, $a \neq 0$, where u is some expression in x. The expression $au^2 + bu + c$ is called the quadratic form of the original expression.

Go Online You can complete an Extra Example online.

Think About It!

The following expressions can be written in quadratic form. What do you notice about the terms with variables in the original expressions?

$2x^{10} + x^5 + 9$

$12x^6 - 20x^3 + 6$

$15x^2 + 9x^4 - 1$

Example 6 Write Expressions in Quadratic Form

Write each expression in quadratic form, if possible.

a. $4x^{20} + 6x^{10} + 15$

Examine the terms with variables to choose the expression equal to u.

$4x^{20} + 6x^{10} + 15 = (\underline{2x^{10}})^2 + \underline{3}(2x^{10}) + \underline{15}$ $\quad (2x^{10})^2 = 4x^{20}$

b. $18x^4 + 180x^8 - 28$

If the polynomial is not already in standard form, rewrite it. Then examine the terms with variables to choose the expression equal to u.

$18x^4 + 180x^8 - 28 = 180x^8 + 18x^4 - 28$ $\quad$ Standard form of a polynomial

$= \underline{5}(6x^4)^2 + \underline{3}(6x^4) - \underline{28}$ $\quad (6x^4)^2 = 36x^8$

c. $9x^6 - 4x^2 - 12$

Because $x^6 \neq (x^2)^2$, the expression <u>cannot</u> be written in quadratic form.

Check

What is the quadratic form of $10x^4 + 100x^8 - 9$?

$4(5x^4)^2 + 2(5x^4) - 9$

Example 7 Solve Equations in Quadratic Form

Solve $8x^4 + 10x^2 - 12 = 0$.

$8x^4 + 10x^2 - 12 = 0$	Original equation
$\underline{2}(2x^2)^2 + \underline{5}(2x^2) - 12 = 0$	$2(2x^2)^2 = 8x^4$
$2u^2 + 5u - 12 = 0$	Let $u = 2x^2$.
$(\underline{2u} - \underline{3})(u + 4) = 0$	Factor.
$u = \underline{\frac{3}{2}}$ or $u = \underline{-4}$	Zero Product Property
$\underline{2x^2} = \frac{3}{2}$ $\quad \underline{2x^2} = -4$	Replace u with $2x^2$.
$x^2 = \frac{3}{4}$ $\quad x^2 = -2$	Divide each side by 2.
$x = \pm\frac{\sqrt{3}}{2}$ $\quad x = \pm i\sqrt{2}$	Take the square root of each side.

The solutions are $\frac{\sqrt{3}}{2}$, $-\frac{\sqrt{3}}{2}$, $i\sqrt{2}$, and $-i\sqrt{2}$.

Check

What are the solutions of $16x^4 + 24x^2 - 40 = 0$?

$x = \underline{-1, 1, i\sqrt{\frac{5}{2}}, -i\sqrt{\frac{5}{2}}}$

Go Online You can complete an Extra Example online.

Talk About It!

Describe how the exponent of the expression equal to u relates to the exponents of the terms with variables.

Sample answer: The exponent of the expression equal to u is the same as the lesser exponent of the two terms with variables.